Pressure Washer
Manufacturing No. 090079294/090079319
Item No. PS80312E/PS80312E-ECOM
Replacement Parts List

991000762
3-23-16 (Rev:01)

POWERSTROKE PRESSURE WASHER – ITEM NO. PS80312E/PS80312E-ECOM

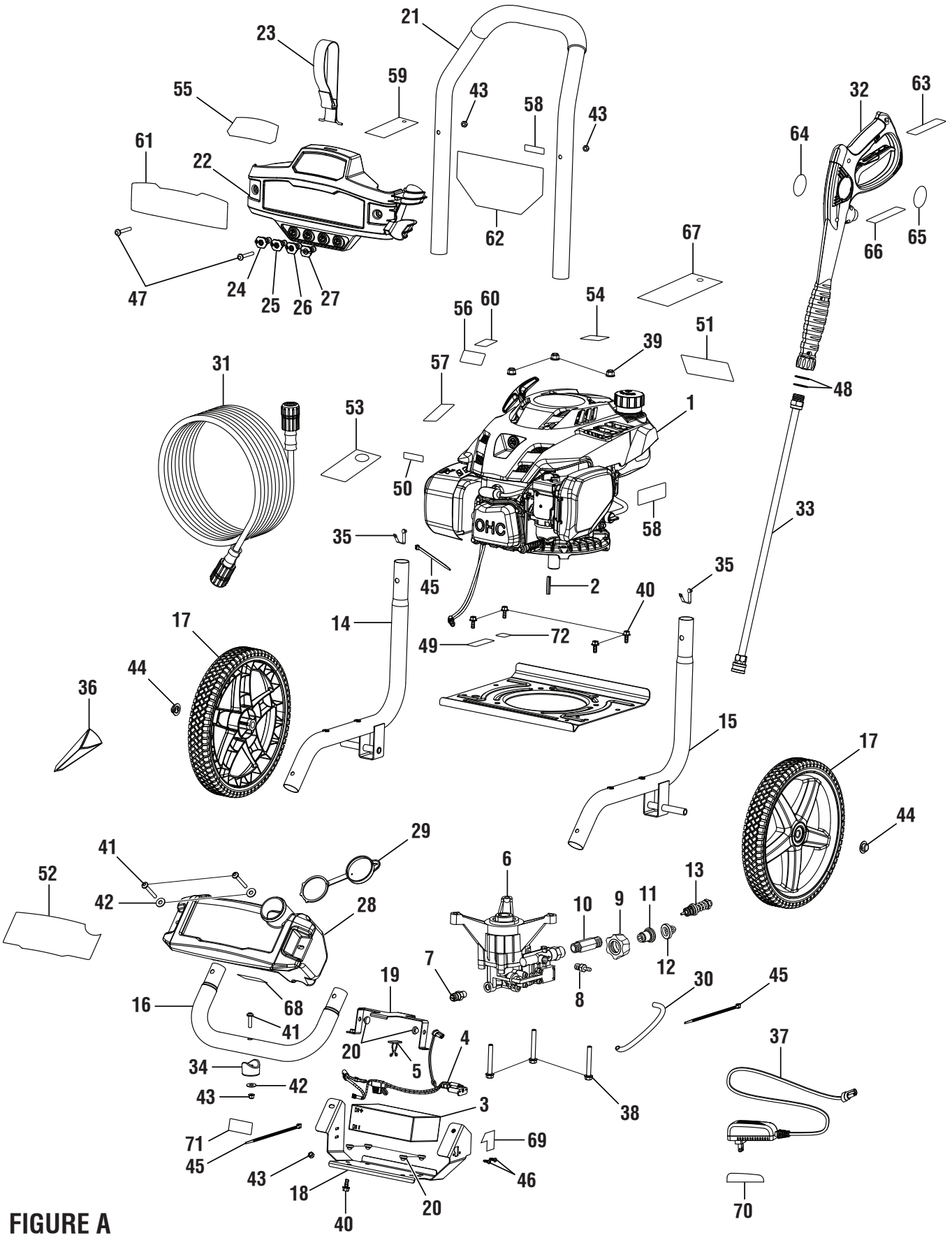

FIGURE A

POWERSTROKE PRESSURE WASHER – ITEM NO. PS80312E/PS80312E-ECOM

The model number will be found on a label attached to the engine. Always mention the model number in all correspondence regarding your **PRESSURE WASHER** or when ordering replacement parts.

KEY NO.	PART NUMBER	DESCRIPTION	QTY
1	Note A	Engine (Subaru EA190, 2016)	1
2	678041006	Output Shaft Key	1
3	750400007	Battery	1
4	290435030	Battery and Charger Wire Harness	1
5	900333020	Cable Twist Tie	1
6	308653078	Pump	1
7	678169004	Thermal Release Valve	1
8	308452002	Soap Injector Kit	1
9	310993003	Inlet Filter Adapter Insert	1
10	308862003	Outlet Tube	1
11	642058001	Inlet Filter Connector	1
12	308662001	Inlet Filter Screen	1
13	310924003	Unloader Valve Assembly	1
14	310703012	Left Frame Assembly (Inc. Key No. 35)	1
15	310704013	Right Frame Assembly (Inc. Key No. 35)	1
16	310742028	Front Frame Assembly (Inc. Key Nos. 34 and 41-43)	1
17	308451060	Wheel (12 in.)	2
18	678714018	Battery Mount Bracket	1
19	636694001	Battery Hold Down	1
20	570733003	Isolator	6
21	308638060	Handle Assembly	1
22	310673030	Hose & Nozzle Holder Assembly	1
23	308350003	Hose Holder Strap	1
24	308697012	0° Deg Nozzle	1
25	308699012	25° Deg Nozzle	1
26	308700012	40° Deg Nozzle	1
27	308706011	Soap Nozzle	1
28	580875019	Soap Tank	1
29	310650004	Soap Tank Cap	1
30	570728010	Chemical Siphon Tube	1
31	308835006	Hose (25 ft.)	1
32	308760019	Trigger Handle Assembly (Inc Key Nos. 65-66)	1
33	308506006	Wand Assembly	1
34	570554002	Wear Pad	1
35	308421004	Handle Spring Clip	2
36	519314001	Funnel	1
37	140173025	Battery Charger	1
38	660962003	Bolt (M8 x 60 mm, Flange Hex Hd.)	3
39	678774002	Flange Lock Nut (M8)	3
40	661505020	Flange Bolt (M6 x 16 mm)	5
41	661503015	Screw (M6 x 48 mm, T-30 Torx Hd.)	3
42	638128004	Washer (1/4 in.)	3
43	678610006	Lock Nut (M6)	4
44	679957001	Cap Nut	2
45	900333015	Wire Tie	3
46	660923018	Screw (M4 x 12 mm, T-20 Torx Hd.)	2
47	661834004	Bolt (M6 x 42 mm, T-30 Torx Pan Hd.)	2
48	570742072	O-Ring	2
49	940947021	Combustion Warning Label	1
50	940647133	Choke Label	1
51	940707106	Danger Label	1
52	941608014	Detergent Tank Label	1
53	940889007	Oil Dipstick Hang Tag	1
54	940873007	E85 Label	1
55	940608031	Electric Start Label	1
56	940608034	Subaru Label	1
57	940680083	Hot Surface Label	1
58	941486002	Inquiries Label	2
59	961039005	Standard Nozzle Hangtag	1
60	941721007	On Label	1
61	940779182	Performance Label	1
62	940617177	Quick Start Label	1
63	940654228	Trigger Handle Warning Label (Fr/Sp)	1
64	940786044	Trigger Wand Logo Label	1
65	940654084	Trigger Handle Warning Label (En)	1
66	940786020	Trigger Handle Spec Label	1
67	940473011	Danger Hang Tag	1
68	940473032	Battery Cordwrap Label	1
69	940780024	Battery Bracket Label	1
70	940780025	Battery Maintainer Label	1
71	941155001	Battery Replacement Label	1
72	940871016	Add Oil Label	1
	Not Shown:		
	991000760	Operator's Manual	
	991000761	Quick Start Guide	
	991000839	O-Ring Kit Insert	

NOTE A: OWT Industries, Inc., will not provide engines as replacement parts. Engines are covered through the engine manufacturer's warranty. Consult the accompanying engine manual or contact our service department for assistance.